SPAREPARTS

107 26 65-62

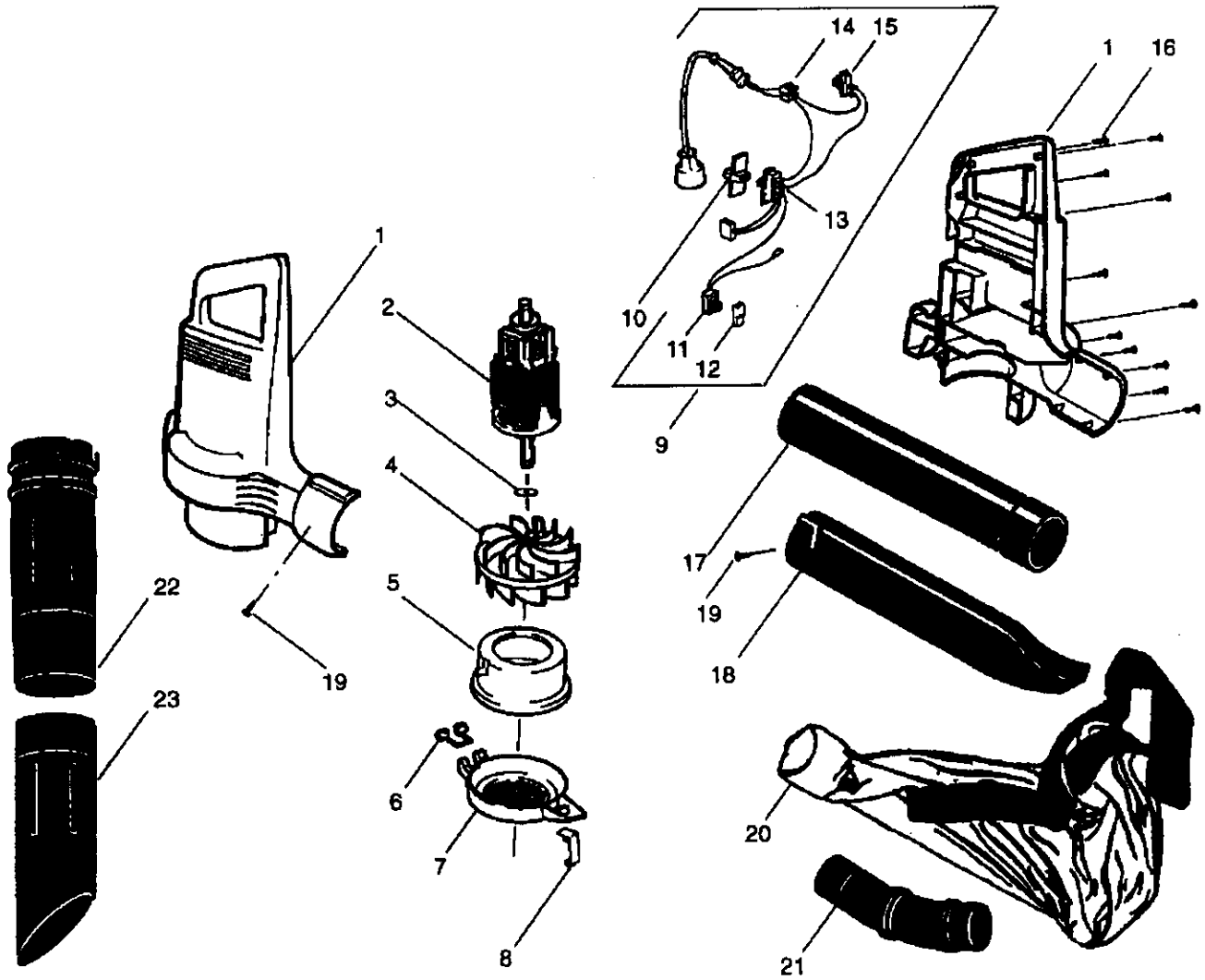

Ref.	Part No.	Description	Ref.	Part No.	Description
1	530402398	Housing Set	17	530401884	Blower Tube
2	530402230	Motor Assembly	18	530094662	Flare Nozzle
3	530400897	Washer–Impeller	19	530402528	Screw–Blower Tube
4	530401097	Impeller	20	530402533	Vacuum Bag
5	530402045	Restrictor	21	530402312	Elbow–Vac Bag
6	530402043	Spring Return	22	530402231	Vac Tube Inlet
7	530402635	Inlet cover	23	530402232	Vac Tube Lower
8	530402044	Lever Spring			
9	–	Harness (Incl. 11–15)			
	530402225	Europe			
	530402401	UK			
	✓ 530402916	Switzerland	Not Shown		
10	530402041	Switch Cover			
11	530402227	Hinge Switch		–	Operator's Manual
12	530402636	Cover–Hinge Switch		530083508	Europe
13	530402226	Switch			
14	530400139	Terminal Block			
15	530402294	Thermal Circuit Breaker			
16	530016120	Screw			

✓ = NEW PART NUMBER FOR THIS IPL ★ = REFER TO THE SERVICE REFERENCE INDICATED FOR MORE INFORMATION. (LOCATED AT END OF IPL)

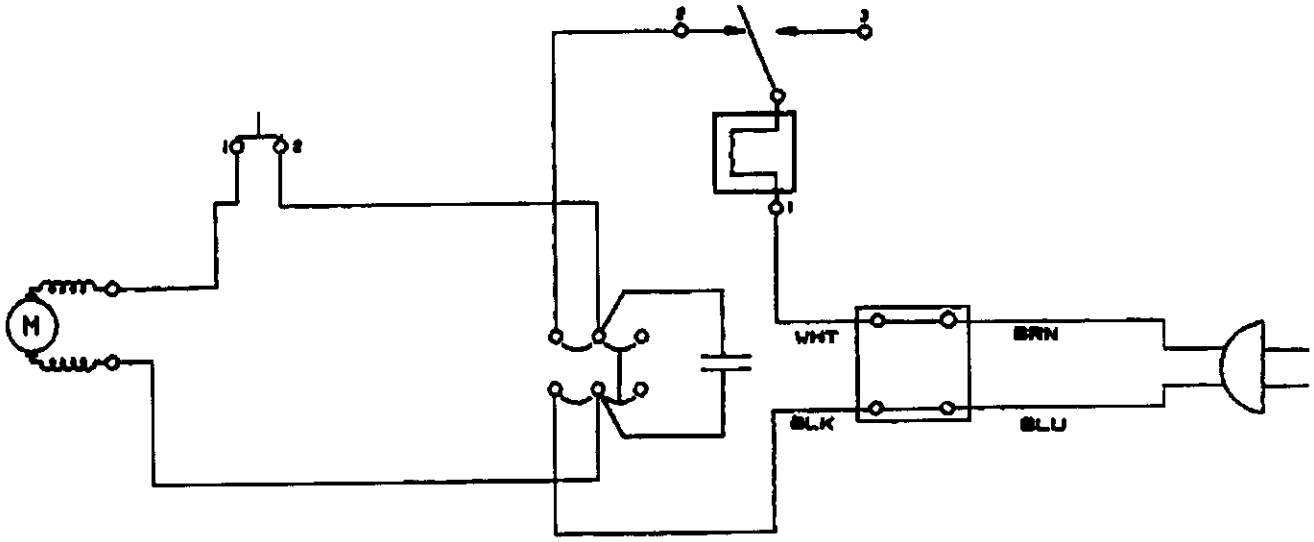
M
WHT
BRN
BLK
BLU

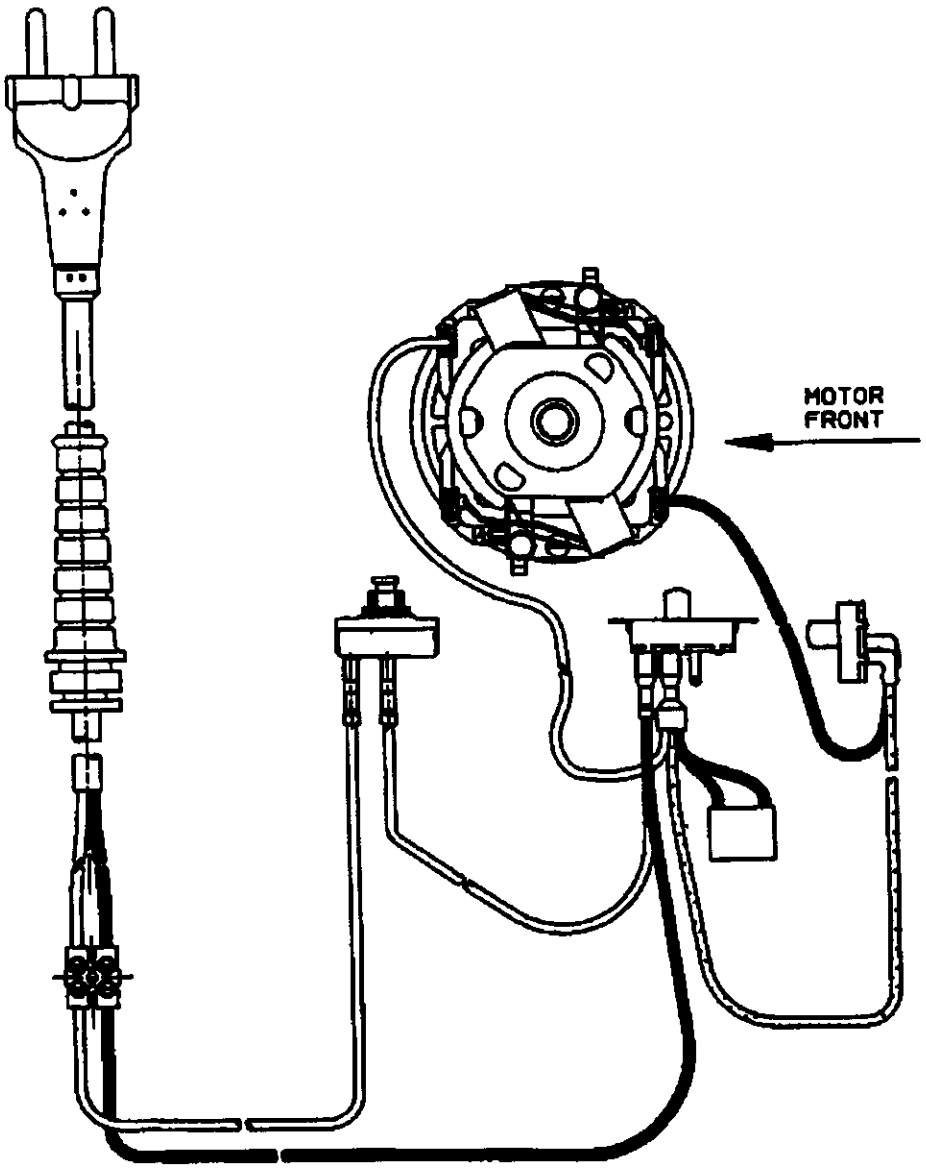
MOTOR
FRONT